PLANAR HORIZONTAL

Stelrad Radiator Group

Designer Series

50 Δt

(75/65/20°C)

K1

K2

Height mm	Length mm	Sections	K1 Stelrad UIN	K1 Heat output Watts	K1 Heat output Btu/hr	K2 Stelrad UIN	K2 Heat output Watts	K2 Heat output Btu/hr
300	500	15	140900	235	802	140904	465	1587
	1000	30	140901	469	1601	140905	929	3171
	1400	42	140902	657	2242	140906	1301	4440
	2000	60	140903	938	3201	140907	1858	6341
400	400	12	140908	250	853	140917	471	1608
	600	18	140909	376	1283	140918	706	2410
	800	24	140910	501	1710	140919	942	3215
	1000	30	140911	626	2137	140920	1177	4017
	1200	36	140912	751	2563	140921	1412	4819
	1400	42	140913	876	2990	140922	1648	5625
	1600	48	140914	1002	3420	140923	1883	6427
	1800	54	140915	1127	3846	140924	2119	7232
	2000	60	140916	1252	4273	140925	2354	8034
500	400	12	140926	310	1058	140935	564	1925
	600	18	140927	464	1584	140936	847	2891
	800	24	140928	619	2113	140937	1129	3853
	1000	30	140929	774	2642	140938	1411	4816
	1200	36	140930	929	3171	140939	1693	5778
	1400	42	140931	1084	3700	140940	1975	6741
	1600	48	140932	1238	4225	140941	2258	7707
	1800	54	140933	1393	4754	140942	2540	8669
	2000	60	140934	1548	5283	140943	2822	9631
600	400	12	140944	364	1242	140953	654	2232
	600	18	140945	547	1867	140954	980	3345
	800	24	140946	729	2488	140955	1307	4461
	1000	30	140947	911	3109	140956	1634	5577
	1200	36	140948	1093	3730	140957	1961	6693
	1400	42	140949	1275	4352	140958	2288	7809
	1600	48	140950	1458	4976	140959	2614	8922
	1800	54	140951	1640	5597	140960	2941	10038
	2000	60	140952	1822	6218	140961	3268	11154
700	400	12	140974	415	1417	140983	739	2522
	600	18	140975	623	2125	140984	1109	3783
	800	30	140976	830	2833	140985	1478	5044
	1000	36	140977	1038	3542	140986	1848	6305
	1200	42	140978	1246	4250	140987	2218	7566
	1400	48	140979	1453	4958	140988	2587	8828
	1600	54	140980	1661	5667	140989	2957	10089
	1800	60	140981	1868	6375	140990	3326	11350
	2000	66	140982	2076	7083	140991	3696	12611

Δt50 is the UK's industry standard for heating outputs, which has an operating temperature of 75/65/20ºC. If you have a low temperature heat source you may wish to consider Δt40 or Δt30 output (see your installer or system designer or download from www.stelrad.com).

For EN442 data, technical and installation information please visit our website: www.stelrad.com and search product downloads.

PLANAR HORIZONTAL

Designer Series

WALL MOUNTING INFORMATION

All dimensions in mm. Inches in brackets.

K1

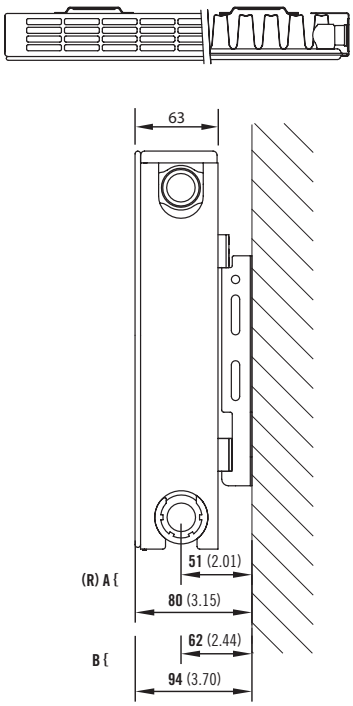

K2

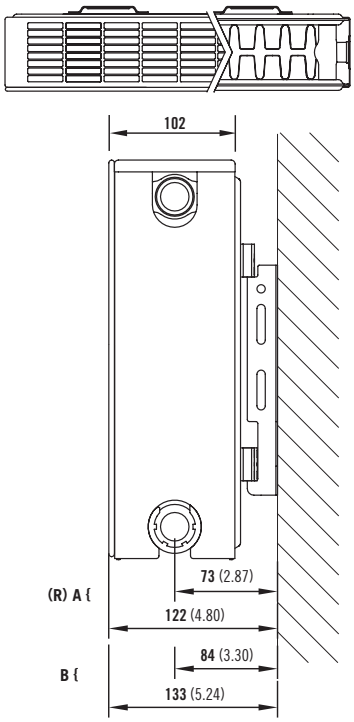

BRACKET POSITION

A = Closest to wall B = Furthest from wall (R) = Recommended mounting position

MOUNTING BRACKETS

All dimensions in mm. Inches in brackets.

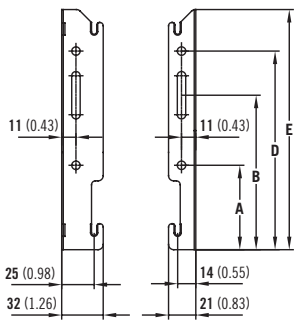

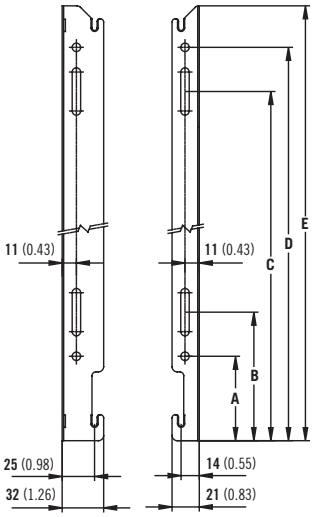

PLANAR HORIZONTAL

Designer Series

K1 AND K2 LUG POSITIONS (New as of June 2016).
All dimensions in mm. Inches in brackets.

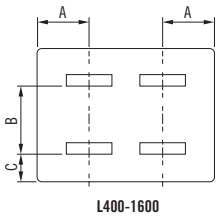

L400-1600

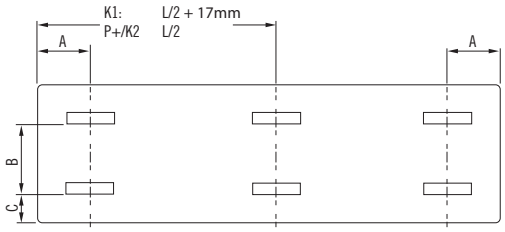

L1800-2000

K1

Dimensions	mm	in
A 400mm	117	4.61
A 500 - 1100mm	150	5.91
A 1200 - 2000mm	133	5.24
B All	60	2.36
C 1800 - 3000mm	17	0.67

K2

Dimensions	mm	in
A 400 - 1100mm	133	5.24
A 1200 - 2000mm	133	5.24
B All	60	2.36

PANEL HEIGHT D

mm	in	mm	in
300	11.81	155	6.10
400	15.75	255	10.04
500	19.69	355	13.98
600	23.62	455	17.93
700	27.56	555	21.85

CONNECTIONS

Each radiator comes with ½" inlet connections as standard.

PIPING OPTIONS

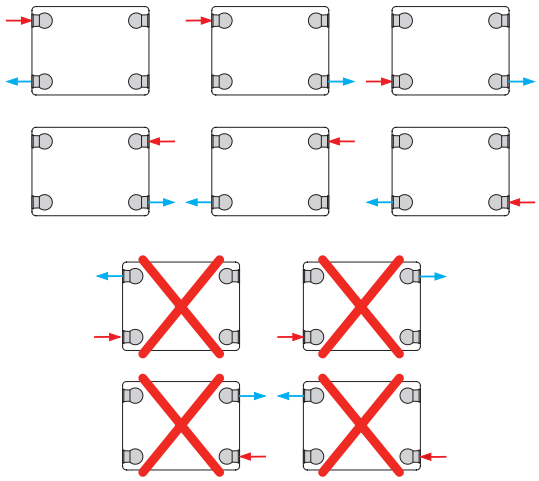

EN 442 CERTIFICATION DATA - CETIAT TESTED IN ACCORDANCE WITH BS EN 442

Type	K1					K2				
Height	300	400	500	600	700	300	400	500	600	700
W/m at 75/65/20	469	629	774	911	1038	929	1177	1411	1634	1848
n-coefficients	1.30	1.29	1.28	1.27	1.27	1.29	1.30	1.31	1.32	1.33
Heated surface area (m^2/m)	2.09	2.95	3.80	4.66	5.51	3.51	4.92	6.33	7.74	9.15
Weight (kg/m)	11.88	16.13	20.39	24.65	28.91	19.60	26.40	33.20	40.00	46.80
Water contents (l/m)	1.89	2.34	2.80	3.25	3.77	3.70	4.67	5.63	6.60	7.63
Wall to tap centre (mm)	54	54	54	54	54	76	76	76	76	76

PLANAR HORIZONTAL

Designer Series

PRESSURE DROPS

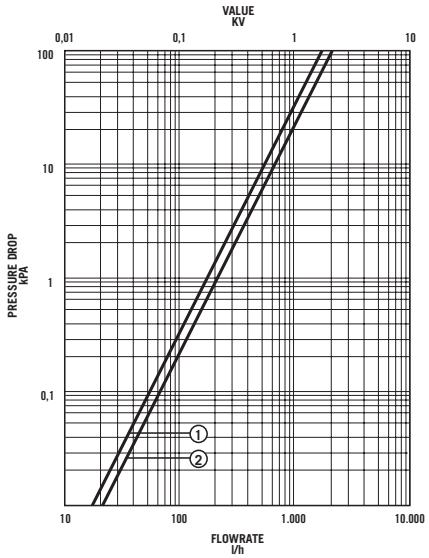

① Type 10 (P1), 11 (K1)
② Type 21 (P+), 22 (K2)

COLOUR GUIDE

Stelrad Radiator Group

A shade for every room, for every interior. Opt for warm elegance, baroque ambience or modern minimalism.

Natural Colours

NT110 Papyrus white
NT120 Pearl white
NT130 Champagne
NT140 Beige
NT150 Beige grey
NT160 Pebble grey
NT170 Quartz grey

SN110 Cream white
SN120 Cream
SN130 Mocca
SN140 Bordeaux
SN150 Sepia
SN160 Pale blue
SN170 Black

Metallic Colours

ML110 Dove grey
ML120 Titanium grey
ML130 Blue grey
ML140 Granite
ML150 Cappuccino
ML160 Terra brown
ML170 Graphite black

RAL Colours

A1004 Golden yellow
A2003 Pastel orange
A3002 Carmine red
A3003 Robin red
A5002 Ultramarine blue
A6018 Yellow green
A7001 Silver grey

A7011 Iron grey
A7016 Anthracite grey
A7030 Stone grey
A7035 Light grey
A8017 Chocolate brown
A9003 Signal white
A9005 Jet black

RAL 9016* Traffic white

FOR FURTHER INFORMATION ON RAL COLOURS PLEASE VISIT WWW.RALCOLOR.COM

RAL 9016* Traffic white comes as standard on all radiators.

Stelrad Radiators are available in white (RAL 9016) as standard, however the specific Radiators identified are now available in a variety of colours. The colours shown are reproduced as accurately as this process will allow and can be made to order on the identified products.

All colour radiators have up to an 8 week lead time, and when a coloured radiator or radiators have been ordered they cannot be cancelled or returned.

To request a colour chart please email **marketing@stelrad.com**