Stelrad
Radiator Group

The Stelrad Caliente Horizontal is stylish in design, using tubular features to create a sleek and contemporary radiator.

CALIENTE HORIZONTAL

Stelrad Radiator Group

Boutique Series

50 Δt

(75/65/20°C)

SINGLE TUBE

Height mm	Length mm	Stelrad UIN	Heat output Watts	Heat output Btu/hr
594	800	405911800	607	2071
	1000	405911100	740	2525
	1200	405911120	873	2979
	1400	405911140	1004	3426

DOUBLE TUBE

Height mm	Length mm	Stelrad UIN	Heat output Watts	Heat output Btu/hr
594	800	405922800	941	3211
	1000	405922100	1148	3917

Δt50 is the UK's industry standard for heating outputs, which has an operating temperature of 75/65/20ºC. If you have a low temperature heat source you may wish to consider Δt40 or Δt30 output (see your installer or system designer or download from www.stelrad.com).

For EN442 data, technical and installation information please visit our website: www.stelrad.com and search product downloads.

CALIENTE HORIZONTAL

Stelrad Radiator Group

Boutique Series

WALL MOUNTING INFORMATION

All dimensions in mm. Inches in brackets.

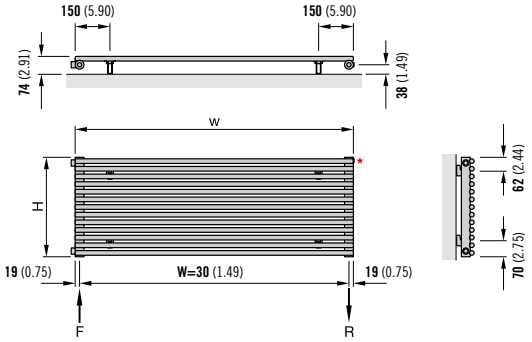

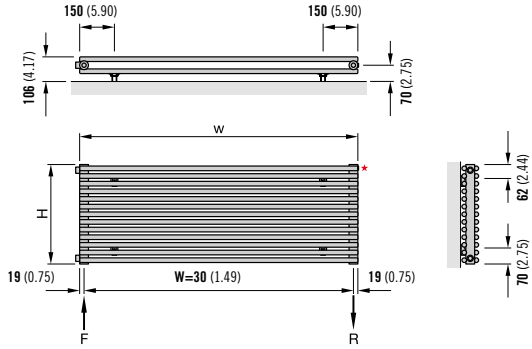

PRODUCT SPECIFICATION

Tube diameter = Ø20mm and Ø38mm
Steel thickness = 1.25mm for Ø20 ; 1.4mm for Ø38
Working pressure = 6 bar
Operating temp = 110° max

★ Air vents

CONNECTIONS

Each radiator comes with ½" inlet connections as standard.

EN 442 CERTIFICATION DATA - CETIAT TESTED IN ACCORDANCE WITH BS EN 442

Type	Single	Double
Height	594	594
W/m at 75/65/20	782	1210
n-coefficients	1.25	1.26
Heated surface area (m^2/m)	1.13	2.26
Weight (kg/m)	12.2	22.6
Water contents (l/m)	5.49	12.47
Wall to tap centre (mm)	38	70